DATA SHEET

74F540
Octal inverter buffer (3- State)
74F541
Octal buffer (3- State)

Product specification

1990 Jan 08

IC15 Data Handbook

Philips
Semiconductors

PHILIPS

74F540 Octal Inverter Buffer (3-State)
74F541 Octal Buffer (3-State)

FEATURES

- High impedance NPN base inputs for reduced loading (20µA in High and Low states)
- Low power, light bus loading
- Functionally similar to the 74F240 and 74F241
- Provides ideal interface and increases fan-out of MOS microprocessors
- Efficient pinout to facilitate PC board layout
- Octal bus interface
- 3-State buffer outputs sink 64mA
- 15mA source current

TYPE	TYPICAL PROPAGATION DELAY	TYPICAL SUPPLY CURRENT (TOTAL)
74F540	3.5ns	58mA
74F541	5.5ns	55mA

ORDERING INFORMATION

DESCRIPTION	COMMERCIAL RANGE V_{CC} = 5V ±10%, T_{amb} = 0°C to +70°C	PKG DWG #
20-Pin Plastic DIP	N74F540, N74F541N	SOT146-1
20-Pin Plastic SOL	N74F540D, N74F541D	SOT163-1

DESCRIPTION

The 74F540 and 74F541 are octal buffers that are ideal for driving bus lines or buffer memory address registers. The outputs are capable of sinking 64mA and sourcing up to 15mA, producing very good capacitive drive characteristics. The devices feature input and outputs on opposite sides of the package to facilitate printed circuit board layout.

INPUT AND OUTPUT LOADING AND FAN-OUT TABLE

PINS	DESCRIPTION	74F(U.L.) HIGH/LOW	LOAD VALUE HIGH/LOW
I0–I7	Data inputs	1.0/0.033	20µA/20µA
$\overline{OE}$0, $\overline{OE}$1	3-State output enable inputs (active Low)	1.0/0.033	20µA/20µA
Y0 - Y7	Data outputs (74F541)	750/106.7	15mA/64mA
$\overline{Y}$0 - $\overline{Y}$7	Data outputs (74F540)	750/106.7	15mA/64mA

NOTE: One (1.0) FAST Unit Load is defined as: 20µA in the High state and 0.6mA in the Low state.

PIN CONFIGURATION – 74F540

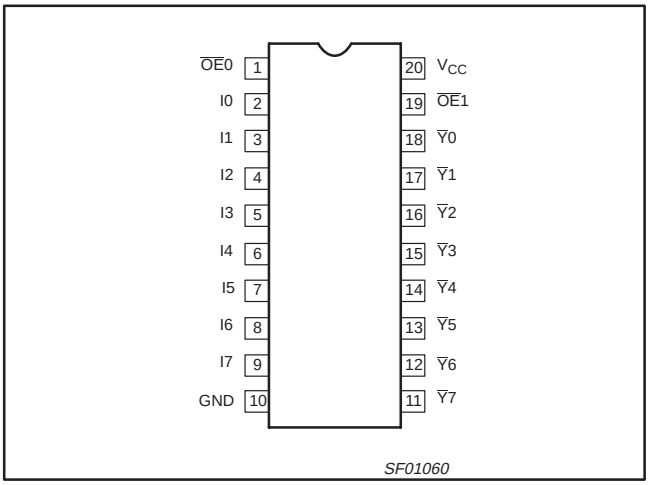

PIN CONFIGURATION – 74F541

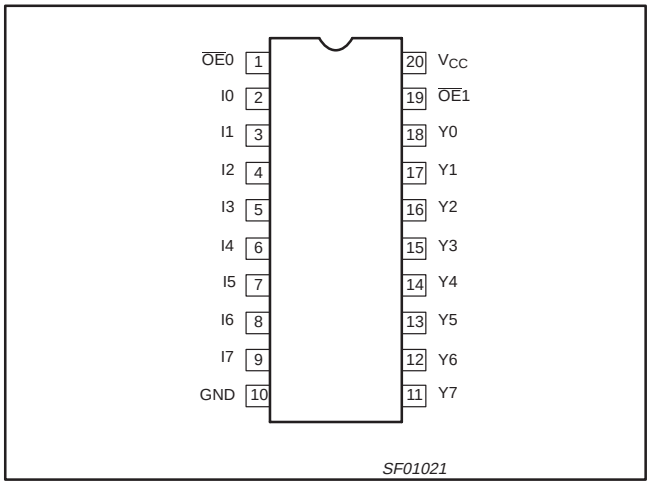

LOGIC SYMBOL – 74F540

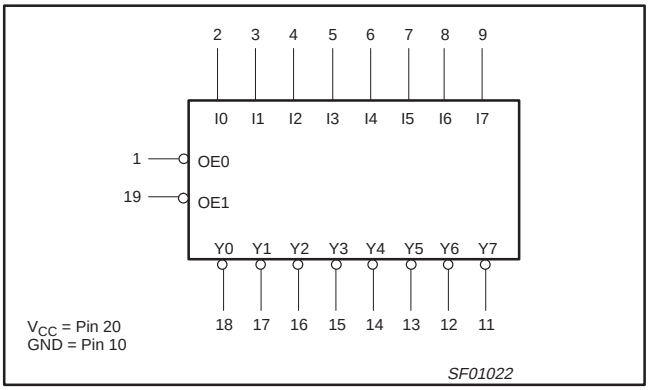

LOGIC SYMBOL – 74F541

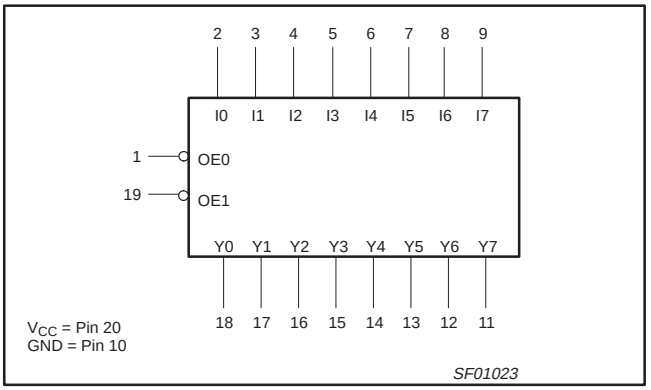

LOGIC SYMBOL (IEEE/IEC) – 74F540

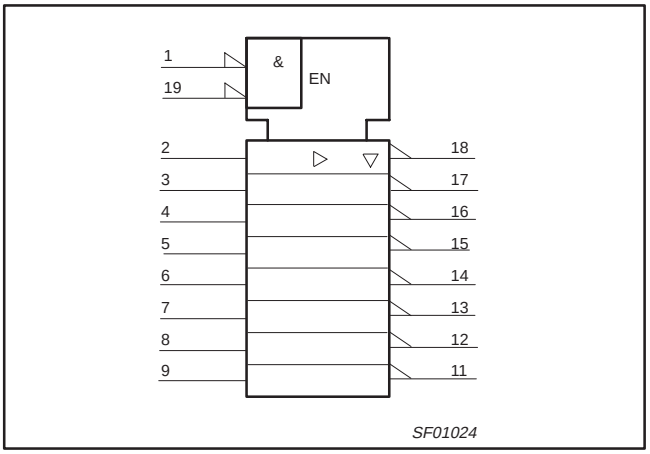

LOGIC SYMBOL (IEEE/IEC) – 74F541

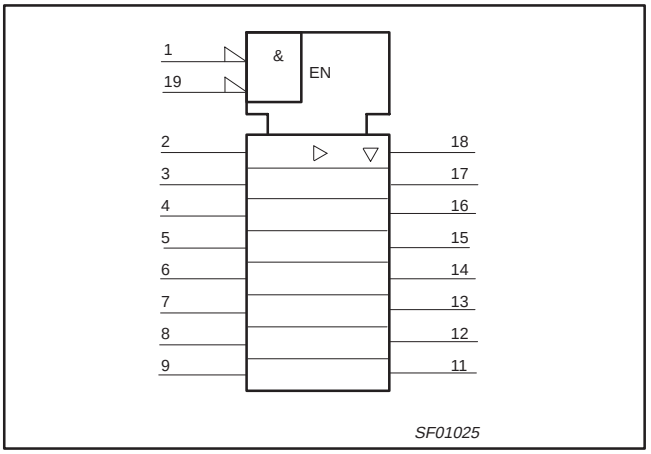

LOGIC DIAGRAM – 74F540

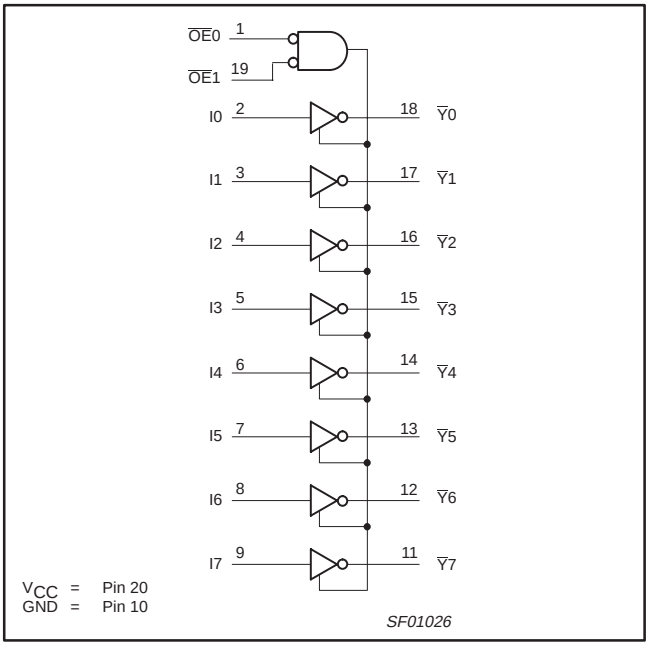

LOGIC DIAGRAM – 74F541

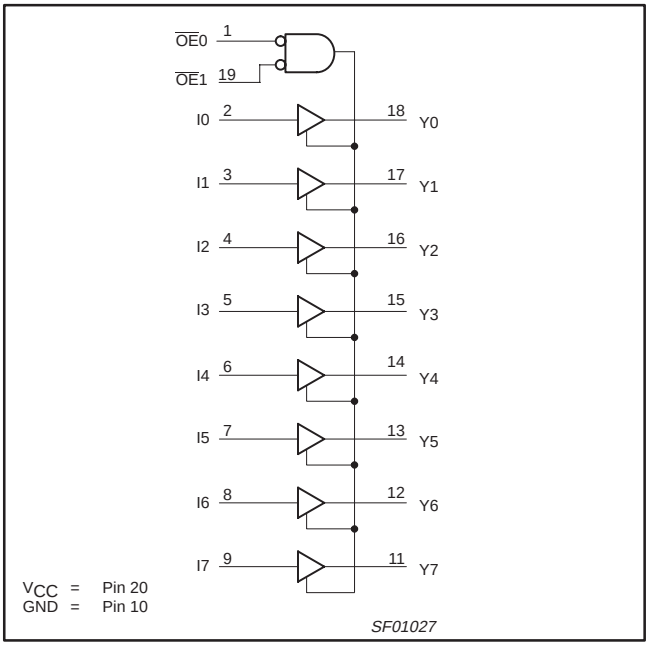

FUNCTION TABLE

INPUTS			OUTPUTS	
			74F541	74F540
$\overline{OE0}$	$\overline{OE1}$	In	Yn	$\overline{Y}n$
L	L	L	L	H
L	L	H	H	L
X	H	X	Z	Z
H	X	X	Z	Z

H = High voltage level
L = Low voltage level
X = Don't care
Z = High impedance "off" state

ABSOLUTE MAXIMUM RATINGS

(Operation beyond the limits set forth in this table may impair the useful life of the device.
Unless otherwise noted these limits are over the operating free-air temperature range.)

SYMBOL	PARAMETER	RATING	UNIT
V_{CC}	Supply voltage	–0.5 to +7.0	V
V_{IN}	Input voltage	–0.5 to +7.0	V
I_{IN}	Input current	–30 to +5.0	mA
V_{OUT}	Voltage applied to output in High output state	–0.5 to +V_{CC}	V
I_{OUT}	Current applied to output in Low output state	128	mA
T_{amb}	Operating free-air temperature range	0 to +70	°C
T_{stg}	Storage temperature	–65 to +150	°C

RECOMMENDED OPERATING CONDITIONS

SYMBOL	PARAMETER	LIMITS			UNIT
		MIN	NOM	MAX	
V_{CC}	Supply voltage	4.5	5.0	5.5	V
V_{IH}	High-level input voltage	2.0			V
V_{IL}	Low-level input voltage			0.8	V
I_{IK}	Input clamp current			–18	mA
I_{OH}	High-level output current			–15	mA
I_{OL}	Low-level output current			64	mA
T_{amb}	Operating free-air temperature range	0		70	°C

DC ELECTRICAL CHARACTERISTICS

(Over recommended operating free-air temperature range unless otherwise noted.)

SYMBOL	PARAMETER	TEST CONDITIONS[NO TAG]			LIMITS			UNIT
					MIN	TYP NO TAG	MAX	
V_{OH}	High-level output voltage	V_{CC} = MIN, V_{IL} = MAX, V_{IH} = MIN	I_{OH} = –3mA	±10%V_{CC}	2.4			V
				±5%V_{CC}	2.7	3.4		V
			I_{OH} = –15mA	±10%V_{CC}	2.0			V
				±5%V_{CC}	2.0			V
V_{OL}	Low-level output voltage	V_{CC} = MIN, V_{IL} = MAX, V_{IH} = MIN	I_{OL} = MAX	±10%V_{CC}			0.55	V
				±5%V_{CC}		0.42	0.55	V
V_{IK}	Input clamp voltage	V_{CC} = MIN, I_I = I_{IK}				–0.73	–1.2	V
I_I	Input current at maximum input voltage	V_{CC} = 0.0V, V_I = 7.0V					100	µA
I_{IH}	High-level input current	V_{CC} = MAX, V_I = 2.7V					20	µA
I_{IL}	Low-level input current	V_{CC} = MAX, V_I = 0.5V					–20	µA
I_{OZH}	Off-state output current High-level voltage applied	V_{CC} = MAX, V_O = 2.7V					50	µA
I_{OZL}	Off-state output current Low-level voltage applied	V_{CC} = MAX, V_O = 0.5V					–50	µA
I_{OS}	Short-circuit output current[NO TAG]	V_{CC} = MAX			–100		–225	mA
I_{CC}	Supply current (total)	74F540	I_{CCH}	V_{CC} = MAX, In=$\overline{OE}$n=GND		22	30	mA
			I_{CCL}	In=4.5V, $\overline{OE}$n=GND		58	75	mA
			I_{CCZ}	In=GND, $\overline{OE}$n=4.5V		40	55	mA
		74F541	I_{CCH}	In=4.5V, $\overline{OE}$n=GND		30	40	mA
			I_{CCL}	In=$\overline{OE}$n=GND		55	72	mA
			I_{CCZ}	In=GND, $\overline{OE}$n=4.5V		45	58	mA

NOTES:

1. For conditions shown as MIN or MAX, use the appropriate value under the recommended operating conditions for the applicable type.
2. All typical values are at V_{CC} = 5V, T_{amb} = 25°C.
3. Not more than one output should be shorted at a time. For testing I_{OS}, the use of high-speed test apparatus and/or sample-and-hold techniques are preferable in order to minimize internal heating and more accurately reflect operational values. Otherwise, prolonged shorting of a High output may raise the chip temperature well above normal and thereby cause invalid readings in other parameter tests. In any sequence of parameter tests, I_{OS} should be performed last.

AC ELECTRICAL CHARACTERISTICS

SYMBOL	PARAMETER		TEST CONDITIONS	LIMITS					UNIT
				T_{amb} = +25°C V_{CC} = +5.0V C_L = 50pF, R_L = 500Ω			T_{amb} = 0°C to +70°C V_{CC} = +5.0V ± 10% C_L = 50pF, R_L = 500Ω		
				MIN	TYP	MAX	MIN	MAX	
t_{PLH} t_{PHL}	Propagation delay In to $\overline{Y}$n	74F540	Waveform 1	3.0 1.5	4.5 2.5	6.5 4.5	2.5 1.5	7.5 5.0	ns ns
t_{PZH} t_{PZL}	Output Enable time to High or Low level		Waveform 3 Waveform 4	2.0 4.0	3.5 7.5	6.5 9.5	2.0 4.0	7.0 10.0	ns ns
t_{PZH} t_{PZL}	Output Disable time from High or Low level		Waveform 3 Waveform 4	2.0 2.0	4.0 4.0	6.0 5.5	2.0 2.0	6.5 6.0	ns ns
t_{PLH} t_{PHL}	Propagation delay In to Yn	74F541	Waveform 2	2.5 3.5	5.0 6.0	6.5 7.0	2.5 3.0	7.0 7.5	ns ns
t_{PZH} t_{PZL}	Output Enable time to High or Low level		Waveform 3 Waveform 4	3.0 3.0	5.5 6.5	7.0 8.5	3.0 3.0	7.5 9.5	ns ns
t_{PZH} t_{PZL}	Output Disable time from High or Low level		Waveform 3 Waveform 4	2.0 2.0	4.0 4.0	7.0 7.0	2.0 2.0	7.5 7.5	ns ns

AC WAVEFORMS

For all waveforms, V_M = 1.5V.

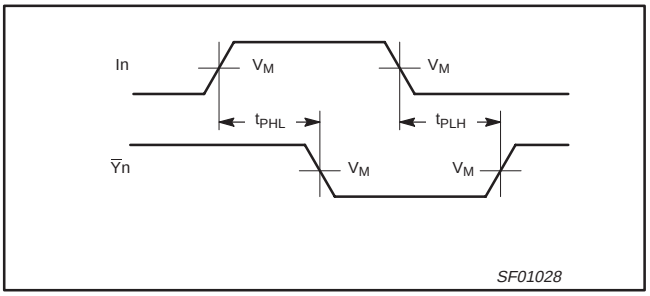

Waveform 1. Propagation Delay Data to Outputs for 74F540

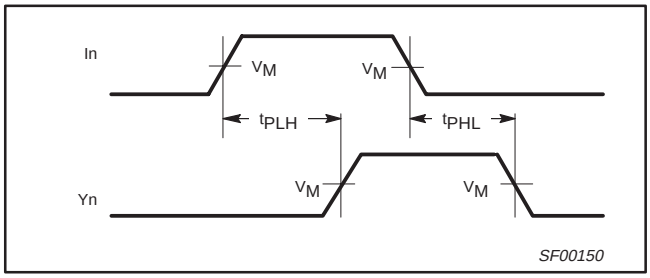

Waveform 2. Propagation Delay Data to Outputs for 74F541

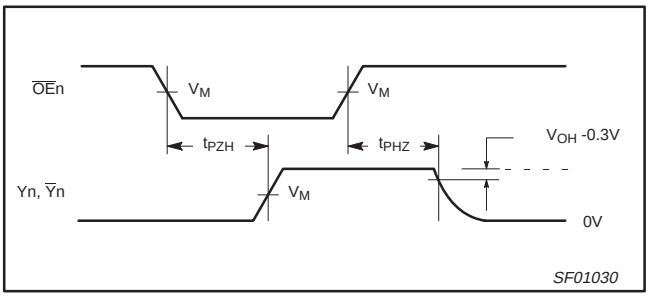

Waveform 3. 3-State Output Enable Time to High Level and Output Disable Time from High Level

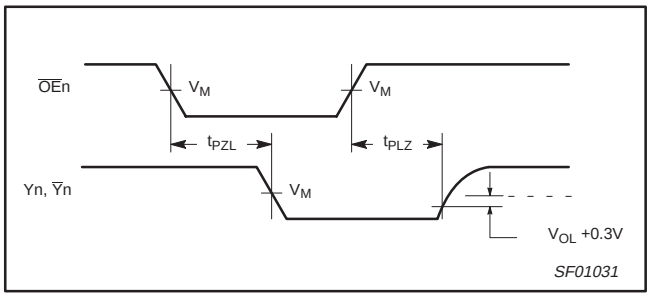

Waveform 4. 3-State Output Enable Time to Low Level and Output Disable Time from Low Level

TEST CIRCUIT AND WAVEFORM

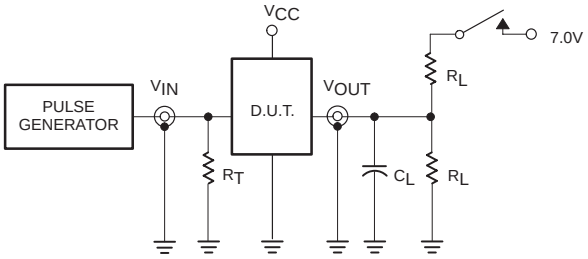

Test Circuit for 3-State Outputs

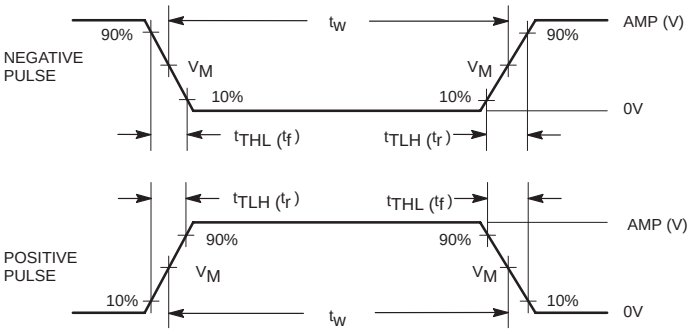

Input Pulse Definition

SWITCH POSITION

TEST	SWITCH
t_{PLZ}	closed
t_{PZL}	closed
All other	open

DEFINITIONS:

R_L = Load resistor; see AC electrical characteristics for value.

C_L = Load capacitance includes jig and probe capacitance; see AC electrical characteristics for value.

R_T = Termination resistance should be equal to Z_{OUT} of pulse generators.

family	INPUT PULSE REQUIREMENTS					
	amplitude	V_M	rep. rate	t_w	t_{TLH}	t_{THL}
74F	3.0V	1.5V	1MHz	500ns	2.5ns	2.5ns

SF00777

DIP20: plastic dual in-line package; 20 leads (300 mil) **SOT146-1**

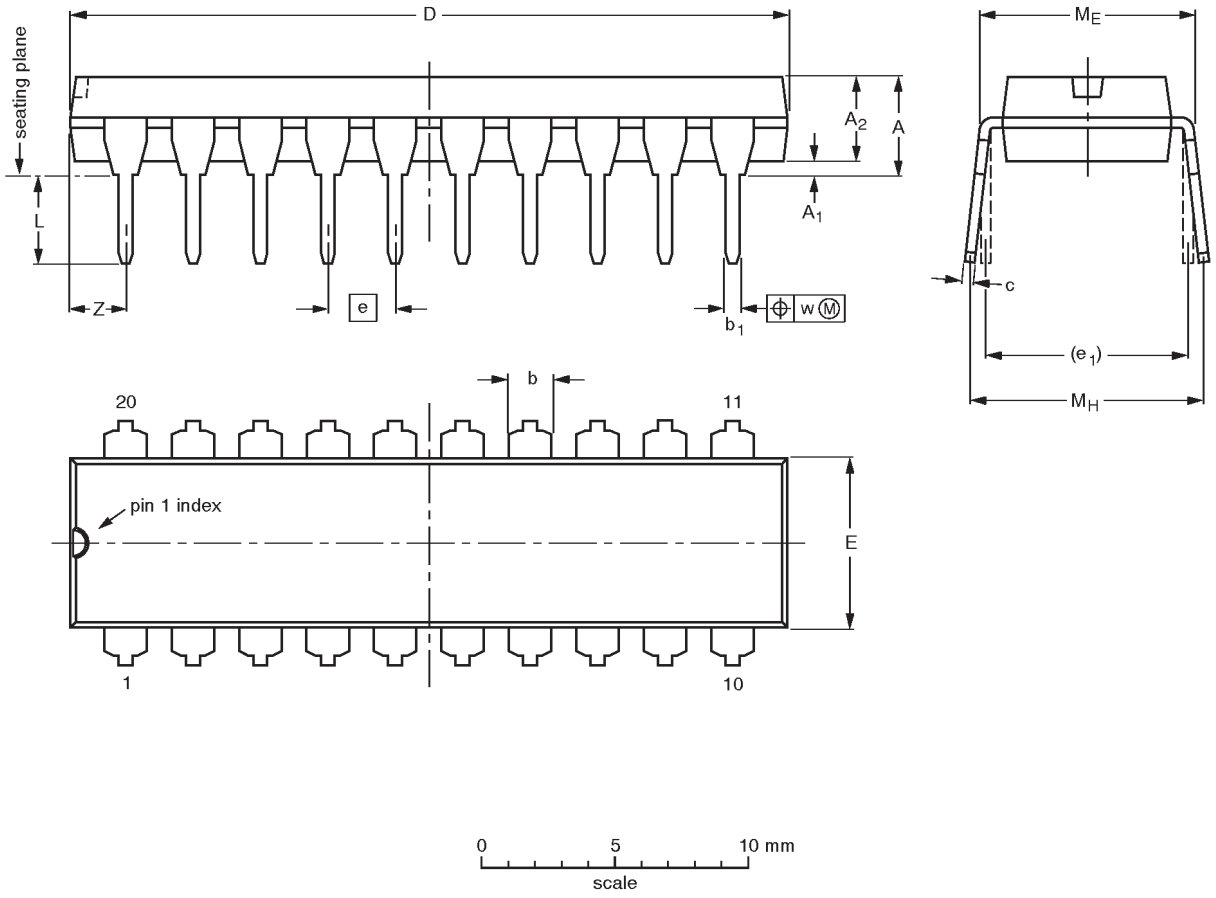

DIMENSIONS (inch dimensions are derived from the original mm dimensions)

UNIT	A max.	A_1 min.	A_2 max.	b	b_1	c	D (1)	E (1)	e	e_1	L	M_E	M_H	w	Z (1) max.
mm	4.2	0.51	3.2	1.73 1.30	0.53 0.38	0.36 0.23	26.92 26.54	6.40 6.22	2.54	7.62	3.60 3.05	8.25 7.80	10.0 8.3	0.254	2.0
inches	0.17	0.020	0.13	0.068 0.051	0.021 0.015	0.014 0.009	1.060 1.045	0.25 0.24	0.10	0.30	0.14 0.12	0.32 0.31	0.39 0.33	0.01	0.078

Note

1. Plastic or metal protrusions of 0.25 mm maximum per side are not included.

OUTLINE VERSION	REFERENCES				EUROPEAN PROJECTION	ISSUE DATE
	IEC	JEDEC	EIAJ			
SOT146-1			SC603			~~92-11-17~~ 95-05-24

SO20: plastic small outline package; 20 leads; body width 7.5 mm **SOT163-1**

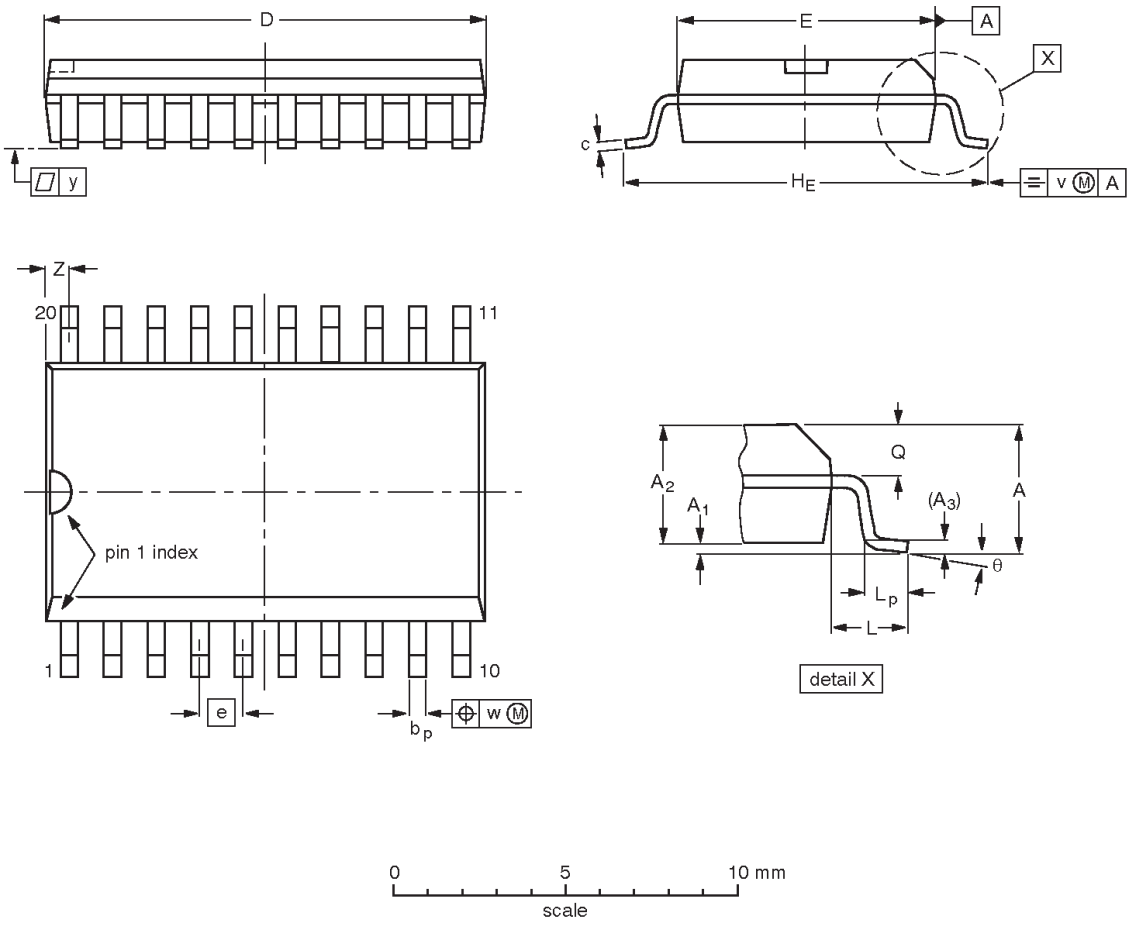

DIMENSIONS (inch dimensions are derived from the original mm dimensions)

UNIT	A max.	A_1	A_2	A_3	b_p	c	$D^{(1)}$	$E^{(1)}$	e	H_E	L	L_p	Q	v	w	y	$Z^{(1)}$	θ
mm	2.65	0.30 0.10	2.45 2.25	0.25	0.49 0.36	0.32 0.23	13.0 12.6	7.6 7.4	1.27	10.65 10.00	1.4	1.1 0.4	1.1 1.0	0.25	0.25	0.1	0.9 0.4	8° 0°
inches	0.10	0.012 0.004	0.096 0.089	0.01	0.019 0.014	0.013 0.009	0.51 0.49	0.30 0.29	0.050	0.419 0.394	0.055	0.043 0.016	0.043 0.039	0.01	0.01	0.004	0.035 0.016	

Note

1. Plastic or metal protrusions of 0.15 mm maximum per side are not included.

OUTLINE VERSION	REFERENCES				EUROPEAN PROJECTION	ISSUE DATE
	IEC	JEDEC	EIAJ			
SOT163-1	075E04	MS-013AC				~~95-01-24~~ 97-05-22

Data sheet status

Data sheet status	Product status	Definition [1]
Objective specification	Development	This data sheet contains the design target or goal specifications for product development. Specification may change in any manner without notice.
Preliminary specification	Qualification	This data sheet contains preliminary data, and supplementary data will be published at a later date. Philips Semiconductors reserves the right to make chages at any time without notice in order to improve design and supply the best possible product.
Product specification	Production	This data sheet contains final specifications. Philips Semiconductors reserves the right to make changes at any time without notice in order to improve design and supply the best possible product.

[1] Please consult the most recently issued datasheet before initiating or completing a design.

Definitions

Short-form specification — The data in a short-form specification is extracted from a full data sheet with the same type number and title. For detailed information see the relevant data sheet or data handbook.

Limiting values definition — Limiting values given are in accordance with the Absolute Maximum Rating System (IEC 134). Stress above one or more of the limiting values may cause permanent damage to the device. These are stress ratings only and operation of the device at these or at any other conditions above those given in the Characteristics sections of the specification is not implied. Exposure to limiting values for extended periods may affect device reliability.

Application information — Applications that are described herein for any of these products are for illustrative purposes only. Philips Semiconductors make no representation or warranty that such applications will be suitable for the specified use without further testing or modification.

Disclaimers

Life support — These products are not designed for use in life support appliances, devices or systems where malfunction of these products can reasonably be expected to result in personal injury. Philips Semiconductors customers using or selling these products for use in such applications do so at their own risk and agree to fully indemnify Philips Semiconductors for any damages resulting from such application.

Right to make changes — Philips Semiconductors reserves the right to make changes, without notice, in the products, including circuits, standard cells, and/or software, described or contained herein in order to improve design and/or performance. Philips Semiconductors assumes no responsibility or liability for the use of any of these products, conveys no license or title under any patent, copyright, or mask work right to these products, and makes no representations or warranties that these products are free from patent, copyright, or mask work right infringement, unless otherwise specified.

Philips Semiconductors
811 East Arques Avenue
P.O. Box 3409
Sunnyvale, California 94088–3409
Telephone 800-234-7381

© Copyright Philips Electronics North America Corporation 1998
All rights reserved. Printed in U.S.A.

print code Date of release: 10-98

Document order number: 9397-750-05134

Let's make things better.

Philips Semiconductors

PHILIPS